Dimensions of Tray **All Dimensions are inches(mm)**

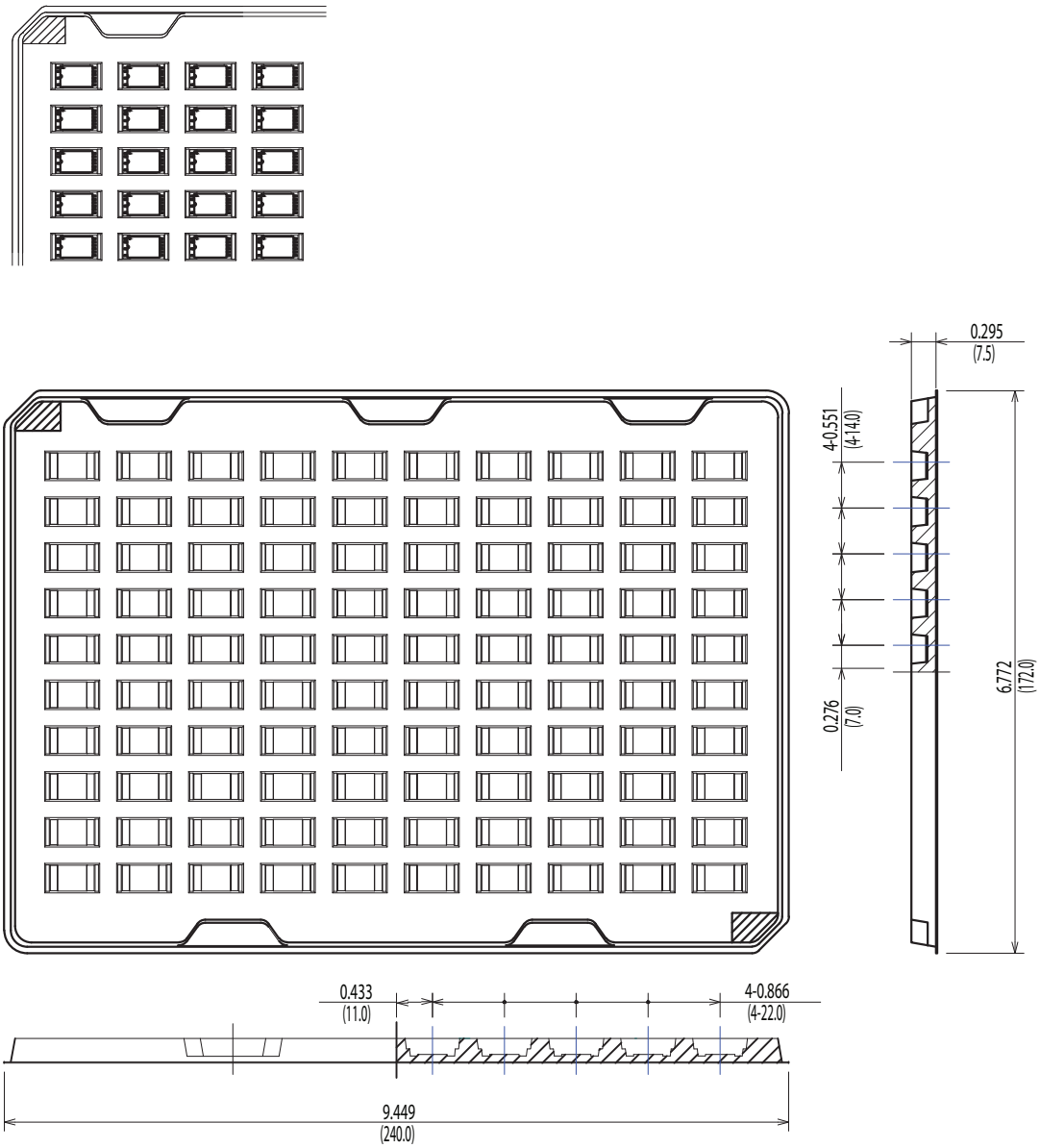

Packing Quantity: 100pcs

Packing conforms to EIA standard EIA-481-2 or EIA-481-3.

Dimensions of Tape and Reel **All Dimensions are inches(mm)**

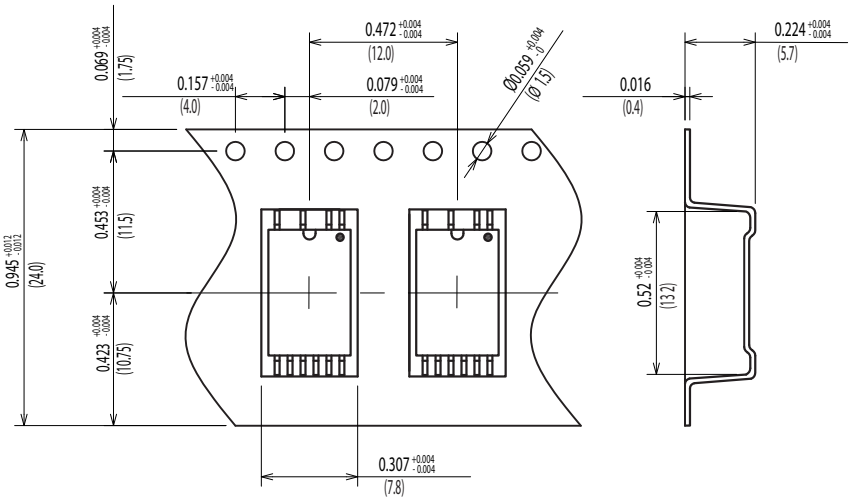

3EH-□5G

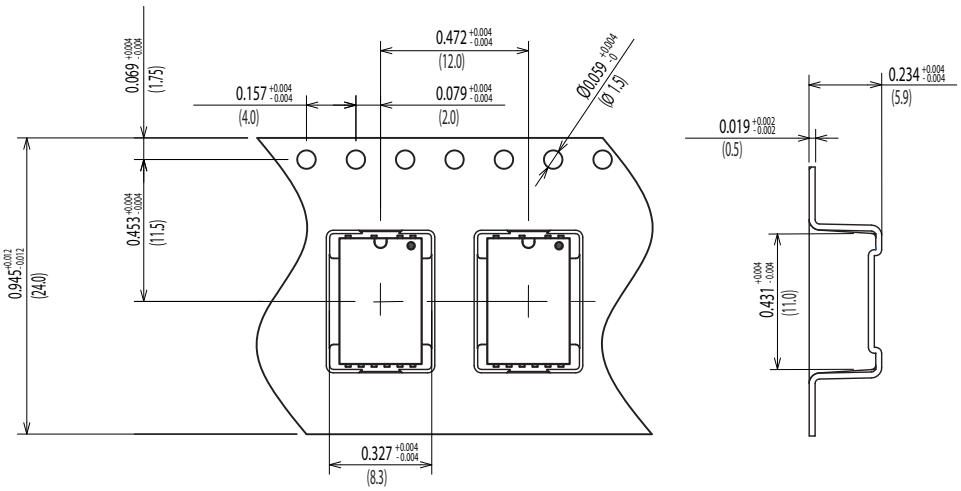

3EH-□5J

Feed Direction

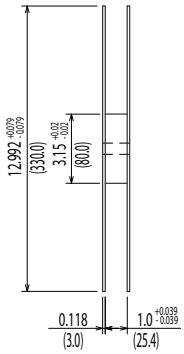

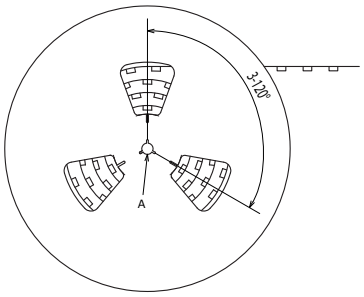

Details of the part A

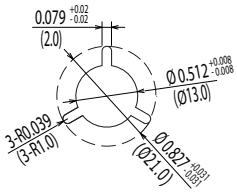

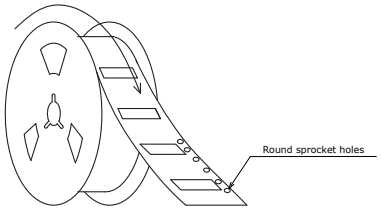

Packing Quantity: 500pcs

Packing conforms to EIA standard EIA-481-2 or EIA-481-3